DESIGN & EXPERIMENTAL STUDY OF A CAPILLARY ELECTROMETER

L. KAHN
H. OSTERGREN

ARMOUR INSTITUTE OF TECHNOLOGY

1909

DESIGN AND EXPERIMENTAL STUDY
OF A
CAPILLARY ELECTROMETER
A THESIS

PRESENTED BY

LAMOS KAHN
HARRY OSTERGREN

TO THE

PRESIDENT AND FACULTY

OF

ARMOUR INSTITUTE OF TECHNOLOGY

FOR THE DEGREE OF

BACHELOR OF SCIENCE IN ELECTRICAL ENGINEERING

HAVING COMPLETED THE PRESCRIBED COURSE OF STUDY IN

ELECTRICAL ENGINEERING

1909

Approved
S. A. Rudtke
Prof. E. E.

A. C. Monin
Dean of Engineering

F. M. Raymond
Dean of Faculty

C O N T E N T S.

THE CAPILLARY ELECTROMETER.

******

HISTORY.

The Capillary Electrometer was invented by Lipmann in 1875 and since then, has been known and used in physical and physiological laboratories. It has not, however, with perhaps two or three exceptions, to the writers' knowledge, been used in the commercial field of Electrical Engineering. In these few exceptions the work done was more of a research nature than of a practical commercial one.

It might be interesting to note, that some work has recently been done on the Electrometer at the Bureau of Standards, Washington, D. C.

OBJECT.

The object of this thesis is, primarily, to determine the application of the Capillary Electrometer as a commercial instrument for the accur-

THE POSITIVE ELECTROSCOPE.

*****

SUMMARY.

The Positive Electroscope was invented by Dr. Edgerton in 1924 and since then, the base design has been used in physical and physiological laboratories. It has not, however, met perhaps too well the requirements, in the military laboratory, for use in the commercial field of Electrical Engineering. In these two examples the work done was more of a research nature rather than of a practical commercial one.

It might be interesting to note, that some early film recently has been done on the Electroscope at the School of Engineering, Washington, D. C.

OBJECT.

The object of this thesis is, primarily, to determine the applicability of the Positive Electroscope as a commercial instrument for the indica-

ate measurment of small electrical potentials.

Secondly, it is intended to ascertain the accuracy and adaptability of the electrometer, for use as a zero instrument, in such experimental investigations where a sensitive galvanometer is, at the present time, used.

Finally, if satisfactory results be obtained in the above investigations, an attempt will be made to investigate the practicability of using a Capillary Electrometer as the indicating element of an Oscillograph for photographing alternating and pulsating electromotive forces.

With the foregoing objects in view the instrument was designed and built, according to the specifications which will follow.

THEORY OF THE INSTRUMENT.

Since the Capillary Electrometer is not an entirely familiar apparatus, it might be well to explain the theory of the instrument as discovered by Lipmann.

The following experiment and accompany-

the measurement of small electrical quantities.

Thirdly, it is intended to measure the electrical loss susceptibility of the dielectrics. For use as a micro instrument, it must experimental formal letters where a multiple publications is, in its original form, needed.

Finally, if satisfactory results are obtained in the above investigations, an attempt will be made to investigate the possibility of using a Cogniard Theorem as the interaction element or an Oscillograph for measurements dielectric and pulsating electromotive forces.

Thus the following objects in view the instrument has features and faults, according to the specifications it is this fields.

THEORY OF THE INSTRUMENT.

Since the Cogniard Theorem is not a entirely familiar approach, it will be well to explain the theory of the instrument in detailed by layman.

The following experiment and accompany-

ing explanation and diagram,(see fig. 1.) will aid the reader in understanding its action.

Two glass tubes of rather small bore are drawn out at one end to a capillary bore. Then the tubes are bent into "U" form so that the end containing the capillary bore is somewhat shorter than the other leg of the "U". Now, each "U" tube is filled with pure mercury, and both tubes are immersed side by side, in a beaker of dilute sulphuric acid, so that the orifices of both capillaries are immersed in the acid. At the same time the air must be expelled from the capillaries by blowing down the large ends of the "U" tubes.

The mercury will stand higher in the large ends of the two tubes, than in either of the capillaries, and the difference of level will be greatest in that "U" tube having the narrowest capillary bore.

Next, a clean platinum wire is passed into each of the large ends of the "U" tubes and these wires are connected for a short time to a source of potential of about one-half a volt.

The mercury column in the capillary

where the current enters, will rise, and that where the current leaves will be depressed. The extent of the movement of the mercury columns varies as the magnitude of the potential that is applied. The altered condition of the mercury columns will persist after the circuit is broken, but on short-circuiting the mercury columns in the two tubes by bringing the free ends of the platinum wires together, the mercury will instantly return, in both tubes, to its original level.

The action is neither electro-magnetic nor that due to a generation of heat, but is one that is entirely different from either. It may perhaps suggest an effect of the so called Pinch phenomenon where a current passing through a liquid produces a pressure tending to pinch the liquid column so as to disrupt it. However, if this was the case the movement would not be in the direction that it is.

This phenomenon is explained by Lipmann with the statement that the surface-tension of the meniscus between the mercury and sulphuric acid is changed by the action of the current, and that this change is directly proportional, within certain limits, to the electromotive force or electric pressure

between the terminals.

This change of surface tension causes the movement of the meniscus and since the change in surface tension is proportional to the P. D. applied, then the deflection of the meniscus must necessarily or logically be proportional to the P. D. It remains to show that this is true by the experimental investigation in the latter part of this thesis.

It is evident that in the movement of the mercury column a definite amount of work is performed; that of lifting the mercury column from one position to another; that of altering the shape and area of the meniscus; and, that of overcoming friction. This total work done is a measure of the potential applied.

In practice, it is unnecessary and inconvenient to observe the movement in both tubes, and therefore, one of them is made larger in both limbs than the other, and serves as a holder for the acid into which the capillary of the second tube dips. This arrangement, with various modifications, is the one used in the instrument designed.

DESIGN OF THE ELECTROMETER.

between the terminals.

This means of getting theory and experiment
the necessary of the conditions and state the change to
another tension is proportional to the E_1 E_2. Besides,
from the definition of the negative over resistance
or indirectly be proportional to the E_1 E_2. It results
to allow that this is true for the experimental investi-
[illegible] of the latter part of this thesis.

In all radio tubes is [illegible] of
the negative resistance a definite amount of [illegible] in
[illegible]; that of letting the current [illegible] the
resistance to [illegible]; that of allowing the voltage [illegible]
[illegible] of the resistance; and; that of [illegible] [illegible].
This [illegible] [illegible] [illegible] [illegible] [illegible]
[illegible].

In practice, it is necessary [illegible] [ille-
gible] to observe the component in both [illegible], and
therefore, one or [illegible] is [illegible] [illegible]
[illegible] [illegible], but [illegible] as a [illegible] for [illegible]
into [illegible] the equivalent of the second [illegible]. This
[illegible], [illegible] [illegible], is the [illegible]
used in the [illegible] [illegible].

[illegible] OF THE [illegible].

In designing the Capillary Electrometer so as to be adaptable for use as outlined above, it was necessary to regard the following considerations.

A form of instrument adaptable to commercial and practical use was desired. It must be as compact as possible, it must be portable, it must be convenient to operate, and finally, it must be designed so that it can be used, with other additions, to serve as an Oscillograph.

The best details of previously used instruments together with our own additional ideas were used. Valuable assistance in the design was obtained from G. J. Burch's paper on the, "THE CAPILLARY ELECTROMETER", published in 1896.

The instrument consists of five important and individual parts, which together form the electrometer. The specifications for each part will be considered and given separately.

The five parts will be named as follows; and a dimensioned diagram of each part is shown. (See Fig. 2, 3, 4, 5 and 6).

A. The "U" tube.

B. The stopper or holder of the acid.

C. The Electrometer tube.

D. The pressure apparatus.

E. The stand and support for the instrument, with the clamps, adjustments, etc.

GENERAL SPECIFICATIONS.

Parts A, B, and C are made of glass, and the following specifications are general and apply to all three.

Soft soda-glass, because of its ready working, is to be used. The glass, before blowing, should be examined for capillary passages in the walls, and if any are present, same should be discarded. This precaution must be taken, since the electrometer is to be used with a microscope or telescope, and if capillary passages or blow-holes be present, the definition of the image of the mercury column will be impaired.

Then the chosen pieces of glass tubing must be scrupulously clean before proceeding to make the electrometer. The cleaning can be done with the so called cleaning solution, made of a mixture of concentrated sulphuric acid and Bichromate of Potash or with aqua regia made by mixing three parts of concentrated Hydrochloric Acid with one part of concentrated Nitric Acid. To assure thorough cleaning the

7. The [illegible] suggestions.

8. [illegible] and acquire for the [illegible], [illegible] [illegible], [illegible] [illegible], [illegible].

[illegible] [illegible].

Items 4, 5, and 6 are [illegible] or clear, and the laboratory specifications are [illegible] and [illegible] in all cases.

Soft sodium, [illegible] [illegible] [illegible], is in [illegible] [illegible]. The [illegible] [illegible] should be [illegible] for [illegible], [illegible] [illegible] [illegible], [illegible] [illegible] [illegible]

tubes should be washed at least three times with either of the above cleaning solutions.

After using the cleaning solutions the tubes should be thoroughly rinsed with pure distilled water, and then finally dried by blowing clean air through them, or by any other convenient method of drying which will not introduce any grit into the tubes.

Much trouble was experienced in the cleaning of the tubes, particularly of the capillary tube, so finally, the above method of cleaning together with the following additional precautions was used.

After cleaning with distilled water, alcohol was used, which evaporates rapidly, and takes some of the water with it. Finally, ether was used which evaporates both the alcohol and water. After this treatment the tubes should be thoroughly clean and free from grit or oil.

The cleaning and drying completed, the making of the parts A, B, and C should be proceeded to at once.

It is of the utmost importance, that the tubes of which the electrometer is made, should be

thoroughly cleaned, since any particle of dirt, no matter how small, which might happen to lodge in the capillary tube, will prevent the electrometer from operating satisfactorily, if at all. This point cannot be emphasized too strongly, and should be thoroughly considered in making an electrometer of this kind.

We will now proceed to the specifications of the various parts of the Capillary Electrometer.

(A) SPECIFICATIONS FOR THE "U" TUBE. (See Fig. 2)

Reference to Fig. 2 will show the complete appearance and dimensions of this part of the apparatus. It is made of glass tubing of 4 MM. bore with walls 1 mm. in thickness. The bend of the "U" is constricted as shown in the diagram so as to prevent the mercury from moving too freely from side to side when the instrument is carried around.

The inner surface of the short limb of the "U" should be slightly tapered so as to allow part B to make a neat and good fit into it. It is also ground for this purpose.

The long end of the "U" has a steel

binding-post cemented on it, to which is attached a platinum leading-in wire of No. 20 B. & S. gauge. Steel binding posts were used instead of copper or brass ones, so that the mercury should not amalgamate with it and thus cause the former to become dirty and impure.

Platinum wire was used so that, if the acid should perchance creep up above the mercury in the capillary tubes, or even in the "U" tube, it should not corrode it; platinum being affected very little by sulphuric acid. The remaining details and dimensions are evident from the diagram.

B. SPECIFICATIONS FOR THE STOPPER OR HOLDER OF THE ACID

(SEE FIGURE #3)

The so called stopper holds the sulphuric acid into which the end of the capillary tube dips. The dimensions and shape are shown in Fig 3. The lower end is ground tapered, so as to make a good tight fit in the short limb of the "U" tube as explained in the specifications for part A.

The wedge shape of this part was decided upon, as it is best adapted for passing a beam

of light along through the top of the mercury column for use in Oscillographic work. For th s reason also, the wide sides of the stopper should be perfectly parallel so as not to change the direction of a beam of light through them.

C. SPECIFICATIONS FOR THE CAPILLARY OR ELECTROMETER TUBE**(See Fig. 4).

This is the most important part of the instrument, and the greatest precaution and care should be taken in the making of it. Shape and dimensions are as shown by Fig. 4.

The crook in the tube should be made just above that point where the tapering of the tube begins. Care should be taken that it is made without flattening at the bend. The diameter of the tube is 6 mm., with walls 1 mm. in thickness. Thecapillary point should be from 1 cm., to 1.5 cm., long, and should be uniform in bore. It must be made with as small a bore as possible and should be parallel to the upper part of the electrometer tube.

Great difficulties were encountered in the experimental work due to the mercury flowing out of the electrometer tube, when the pressure was increased until the meniscus reached the tip of the

capillary tube. This is due to an inequality of pressure produced, the head of mercury in the electrometer tube producing a greater pressure than the surface tension of the meniscus in the capillary tube. The flow of mercury is thus produced.

The lower end of the capillary tube should be cut off square for good performance of the instrument.

On the upper end of the electrometer tube is placed a binding post with leading-in wire of platinum, of construction similar to that on the "U" tube. However, this binding post is corrugated so as to make it easy to slip the end of the rubber pressure apparatus over it. The remaining details can be obtained from the diagram.

The binding posts are cemented on to the glass tubing, and the joints must be made air tight so as to prevent any leakage when pressure is applied by means of the pressure apparatus.

Again extreme care must be taken in the cementing of the binding posts, for if a particle of cement should fall into the capillary tube, it will most likely clog the capillary point and ruin

the instrument.

D. SPECIFICATIONS FOR THE PRESSURE APPARATUS. (See Fig. 5)

The pressure apparatus is constructed entirely of rubber, and is made in the form shown in the accompanying diagram.

As nothing has yet been said, regarding the purpose of this apparatus, a few words of explanation will be in order.

In using the capillary electrometer, especially in calibrating the instrument, and measuring potentials, it is necessary to move the meniscus to any point of the capillary tube desired. This is accomplished by applying a positive pressure or producing a negative pressure, by means of the pressure apparatus.

Referring to the diagram, the tube A is place over the corrugated binding post of the electrometer tube. The bulb B is fixed on the stand, explained later, while the bulb C is arranged so as to slide up or down on a rod K, shown in figures 5 and 6. Mercury is placed in the pressure apparatus and thus, by raising or lowering the bulb C, the pressure on the mercury column in the electrometer tube, can be varied at will. Thus the position of the meniscus can be con-

trolled as needed.

The rubber of which the pressure apparatus is made, should be strong enough to resist a pressure of about 20 cm., of mercury, as this will be the maximum pressure required.

E. SPECIFICATIONS FOR THE STAND, ADJUSTMENTS, ETC.,

(See Fig. 5, 6, 7, 8)

In laying out a suitable support for the instrument, the following considerations were regarded:-

Arrangement was made so that any part of the apparatus could be removed without difficulty. A screw (See Fig. 8.H.**6**5) was provided so that the electrometer tube could be shifted sideways, so as to bring the capillary in the center of the holder of the acid. The "U" tube was clamped with an adjustable clamp L (See Fig. 5) so that it could be moved up or down with reference to the capillary tube. These adjustments can be readily seen from the diagrams and photographs of the apparatus.

Claws are provided (EE)**(See Fig. 5 & 7) sliding on bars (KK). The bulbs C and B of the pressure apparatus, fit into these claws, and can thereby be raised or lowered, thus varying the head of

mercury acting on the air column between the pressure apparatus and the surface of mercury in the electrometer tube.

A short-circuiting switch (See Photographs of apparatus), with binding posts was placed on the base of stand, and copper wires were arranged, leading from the switch to the binding posts of the electrometer.

In the instrument designed and used in this thesis, a heavy iron base was provided, but in a portable form the base can be made of wood. Arrangments can then be easily made, so that a cover can be slipped over the entire apparatus and fastened in slots in the base. Small stoppers can be made for the openings of the tubes, to prevent dirt accumulating in them. Likewise, a stopper can be made for the holder of the acid. The acid can be carried in a little bottle with a pipette so that, in setting up the apparatus for use, the acid can be poured into its holder and then after attaching the pressure apparatus, the instrument is ready for work. From the experiences met with in handling the instrument, it might be well not to fill the electrometer tube with mercury until it is ready for use, as it may all run out of the apparatus if same is shaken around.

The above conditions are, of course, for a portable instrument, but in an instrument for use in a laboratory or testing-room, the apparatus, if once set up right, need not be touched, unless, of course, the mercury should run out of the electrometer tube, which we found to be a very frequent occurence.

SPECIFICATIONS FOR MERCURY AND SULPHURIC ACID.*******

Here, again, maximum cleanliness and purity must be attained.

The mercury used for the electrometer should be purchased chemically pure. Then it should be distilled in vacuum.

The apparatus which was used for distilling the mercury was obtained in the Physical Laboratory of the Institute.

It consisted of a tall glass tube dipping into a large basin, holding the mercury to be distilled. At the top of the tube is an enlarged dome-shaped tube, to which is attached another tube leading to the air-pump or other means of producing the vacuum. Around the dome-shaped tube is placed wire gauze and a gas burner for heating the mercury. The air pump, being attached to the before

mentioned tube, is made to exhaust the mercury still, to as near a perfect vacuum as possible. This causes the mercury to rise from the basin to a height in the tube somewhat less than the barometric height, since the air pressure above, is almost entirely removed by the pump.

The heat now acts on the mercury which has risen up into the dome, vaporizing it at a comparatively low temperature, due to the removal of the air pressure. The mercury vapor rises to the top of the dome, where it condenses and falls into a pocket leading to another tube, from which the distilled mercury is drawn off.

It is necessary to dwell upon the distilling of the mercury, since this fact will, to a very large extent, determine whether the electrometer will operate satisfactorily, or not.

Although our mercury was distilled, we found that it still contained more or less dirt which caused great inconvenience. Too much emphasis cannot be laid upon this factor of the instrument.

Next, the sulphuric acid was prepared. Sulphuric acid of 25 % concentration was used,

that is, one part of concentrated sulphuric acid to three parts of water. This gives a density of 1.2 which is that density, at which the conductivity of sulphuric acid is greatest. Caution must again be exercised in obtaining clean acid and distilled water.

EXPERIMENTAL STUDY

Having completed the design and specifications of the capillary electrometer, we will now proceed to the experimental work conducted with the instrument.

A statement of the apparatus and equipment used in the experimental work is given herewith:-

APPARATUS.

Capillary Electrometer.

Cathetometer.

Telescope.

Leeds & Northrup Potentiometer.

Leeds & Northrup Galvanometer.

Rheostat for Potentiometer.

Two Storage Cells.

Cadmium Standard Cell.

Lens for reading Galvanometer.

Resistance Boxes.

Two Double-pole Double-throw Switches.

Wheatstone Bridge.

Three 10 to 1 Potential Transformers.

A. C. Alternator.

One-half micro-farad Condenser.

Telephone Receiver.

Traveling Terminals.

Steel Scale graduated to 1/100".

Two Pipettes.

Two Beakers.

Several Test-Tubes.

Ballistic Galvanometer.

Scale for Telescope.

Charge and Discharge switch for condenser.

METHOD OF PROCEEDURE.

Assembling of the Electrometer.

The first thing in order, after the various parts of the Electrometer were made, was the assembling of the apparatus. The tubes were placed in their proper positions on the stand and the short-circuiting switch was connected by copper wires to the binding posts of the electrometer.

Next the vacuum distilled mercury was

poured, by means of a pipette into the long end of the "U" tube, until it reached a level of about 1 1/2 cm., below the top of the stopper.

Then mercury was similarly poured into the electrometer tube until it reached a high enough level, so as to make good contact with the platinum leading in wire. (See Fig. 5 and photograph of electrometer)

This is where our difficulties commenced. The mercury would almost invariably run out of the capillary tube and empty it before we could connect up our pressure apparatus and apply a negative pressure to prevent its further running out. It was also due to this fact, that we had several electrometer tubes made of still smaller bore, and found one finally, that was most convenient to use.

Now, there being mercury in both the "U" tube and electrometer tube, the pressure apparatus was attached, and the open bulb (C) was raised until the mercury reached the end of the capillary, care being taken, not to apply too great a pressure, so as to cause the mercury to run out.

It remained, but, to drop acid enough

in the stopper, to fill it, and to raise the "U" tube and stopper until the end of the capillary was immersed in the acid.

Finally, it was necessary to observe whether the acid rose in the capillary so as to reach the mercury in it. If the air in the end of the capillary prevents the rise of the acid, the left hand bulb (B) should be given a slight squeeze, just enough to force one or two drops of mercury out of the capillary. Then upon removal of fingers from the bulb, the acid will rise in the capillary and make contact with the mercury.

It is essential that there be no air bubbles in the capillary, as they will break the circuit and prevent the satisfactory operation of the instrument. If any air should lodge there, it can be dislocated and removed by the above described method.

The short circuiting key was then closed and the elctrometer was ready for use. The first photograph is a very good one of the instrument, showing all its parts plainly.

The first experiment performed, was, of course, the application of a small potential, to see if

the instrument would operate as we expected it to. We had never seen an instrument of its kind in operation, so that we were curious to ascertain whether it would do so, or not.

The short-circuiting key was opened and a potential of about .3 volts, obtained from a derived circuit was applied. A movement of the meniscus, easily discernible with the naked eye, occured. The short-circuiting key was next closed and the meniscus moved in a direction opposite to that it had previously moved in; that is, towards its first position. Whether or not it returned exactly to its starting point, was yet to be determined.

Knowing that the instrument would operate, the experimental work was at once begun.

DETERMINATION OF POLARITY.

From the literature on the Capillary Electrometer, it seemed, that for a given direction of E. M. F. applied to the electrometer, the direction of the movement of the meniscus was definite.

The first experiment consisted of an attempt to verify this phenomenon. A potential whose polarity was known, was applied to the terminals of

the instrument, and the direction of deflection was noted. The polarity of the same P. D. was then reversed by a reversal of leads, and it was found that the movement was in the opposite direction.

Further, it was found, that the meniscus of the mercury moved in the direction in which the P. D. was applied. That is, if the E. M. F. was so applied, that its direction was from the electrometer tube to the "U" tube, then the meniscus would move in the same direction as this P.D. was applied. Short-circuiting, of course, caused motion in the direction opposite to that caused by an application of an E.M.F.

In the work following, the P.D. was always applied so that the meniscus would move up in the capillary, that is, the positive side of the P.D. was applied to the "U" tube binding-post. It was marked thus. This proceedure was followed, not only because it was the most logical, but because of the fact that if the reverse direction were used, the application of the P.D., when the meniscus was near the end of the capillary tube, would start the mercury flowing out of it, and thus cause great inconvenience.

PRECAUTIONS IN USING THE CAPILLARY ELECTROMETER.

Before proceeding to the calibration and

other experiments conducted with the instrument, it was experimented with, to learn its peculiarities of action and manipulation, so as to be entirely familiar with the apparatus before undertaking the rest of the experimental work.

A Cathetometer was used to watch the meniscus. This is an instrument used for measuring small vertical distances very accurately. Readings to .0001 cm., can be made with this instrument. A telescope is attached, by means of which the meniscus was viewed.

The following points were noted, and are put down in the order of their importance.

First, if the instrument is in good working condition, that is, when it is clean and the mercury and sulphuric acid are clean, upon applying the P.D., the meniscus will instantaneously respond, and move to its final position instantaneously, giving a deflection corresponding to that P. D.

For the same P.D., the meniscus will move to the same height in the capillary every time, if, of course, the meniscus starts at exactly the same point each time.

If after the application of the P.D.,

and accompanying movement of the meniscus, the P.D., be applied again, the meniscus will not be affected.

After every application of a potential the instrument must be short-circuited before applying another. Upon short-circuiting, if there be no leaks in the pressure apparatus, and if the instrument is clean, the meniscus was returned to exactly the same position.

The above characteristics of the instrument are very important, and it is only by virtue of them, that the instrument can be of any practical value whatsoever. When not in use, it must invariably be short-circuited or electrolytic action will take place and it will be found that upon then closing the short-circuiting key, a movement of the meniscus will take place, as though a potential had been applied. The meniscus will return to that position in which it was located before leaving the instrument.

The maximum E.M.F., which should be impressed upon the electrometer is about .8 volts.

It was found that on applying an E.M.F., larger than the above value, electric dissociation took place and hydrogen gas was given off. This gas collects at the surface of comtact between the acid

and the mercury, and the amount of gas will increase with the number of applications of this large electromotive force, until the circuit in the electrometer is broken, and the instrument will no longer respond to potentials.

Whenever the pressure in the electrometer tube is changed by means of the pressure apparatus, the short-circuiting key must be closed. Otherwise the electrometer will accumulate a charge which will expend itself by a movement of the meniscus when the key is closed after changing the pressure.

It was also observed, that when the instrument was on open circuit, the pressure required to move the meniscus by means of the pressure apparatus was greater than that required when the electrometer was short-circuited.

This seemed to show an apparent resistance, as though a charge resisted the movement of the meniscus.

When the instrument is not in use or rather when it is left from one time to another, the pressure should be released. The weight of the mercury column in the electrometer tube is ordinarily, suffic-

ient in itself, to prevent the creeping of acid up above the mercury column without the added pressure. Again, if the meniscus be allowed to stand continually in the small part of the capillary bore, the mercury will be liable to stick whenever passing that part of the tube.

If the meniscus moves while the instrument is on short circuit, it is either a sign of leakage in the pressure apparatus, or an indication of a potential, due either to a dirty contact or to the acid in the electrometer creeping up above the mercury column to the platinum leading-in wire. If the latter occurs, the mercury must be emptied from the electrometer tube, washed, cleaned, and dried, before it can be used again.

The Capillary Electrometer is unaffected by magnets or stray magnetic fields due to heavy currents passing through wires near it. It is unaffected by slight mechanical jars, but is affected, if the electrometer tube itself, is tapped severely with a pencil or other such implement. Under such circumstances, it may even start the mercury flowing out of the capillary.

When this occurs the acid in the stopper is displaced, and overflows, running over the stand and brass clamps corroding them, and causing great inconvenience.

All in all, the capillary electrometer must be handled with great care, and all of the above precautions must be regarded, if satisfactory operation be desired.

With the above characteristics noted, the instrument can then be intelligently used.

CALIBRATING THE ELECTROMETER.

The scheme for calibrating the electrometer is indicated in Fig. 9.

Two resistance boxes were connected in series with a storage cell and about 110000 ohms was introduced in the circuit. Then, by means of two traveling terminals, as indicated in the figure, any part of the total P.D., across the 110000 ohms could be used to impress upon the Capillary Electrometer. By means of a double-pole double-throw switch (O), this potential could be applied to the potentiometer for measurment.

A Leeds and Northrup Potentiometer was used with a standard Cadmium Cell. By means of a

storage cell and rheostat, the potentiometer was standardized against the standard cell so that the potentiometer would read exactly as indicated by the indications on it. Care must be taken in standardizing, to have the polarity of the standard cell opposed to that of the storage cell. A Leeds and Northrup Galvanometer, used with a reading lens, was used to obtain the balance points.

Now, with the potentiometer standardized, by means of the double-pole double-throw switch, the E.M.F., to be impressed on to the electrometer was thrown on the potentiometer for measurment. The resistances of the potentiometer were then adjusted until a balance was indicated by the galvanometer. This indicates that the P.D., to be measured was equal to the P.D., indicated by the potentiometer. The value of this E.M.F., could then be read off directly.

Next, the short-circuiting switch of the electrometer was opened, and the double-pole double-throw switch was thrown over in the opposite direction. This impressed the above measured E.M.F., on the electrometer causing a deflection of the

meniscus.

The readings of the deflections corresponding to the various potentials were made with the Cathetometer at first. The arrangement of Cathetometer and electrometer is shown clearly by the second photograph. However, it was found impracticable to obtain consistent results with the use of the Cathetometer since it was not located on a solid foundation, and any slight jar or movement would throw it out of adjustment, causing errors in the readings.

For this reason a better and more convenient method was devised. A steel scale graduated to 1 1/100" was placed behind the capillary tube and the meniscus was observed by means of a high power telescope. Under these conditions no tedious adjustments were necessary, since the deflections could be easily read off directly from the scale to 1 1/1000" by estimating between the divisions.

The meniscus was set at a certain point of the capillary by means of the pressure apparatus, and the reading on the scale indicated the exact position from which the meniscus would start each time

[illegible]

upon applying the potential after short-circuiting. The data of calibration was then obtained, readings being taken of corresponding E.M.F.s and deflections of the meniscus.

From the data obtained the calibration curve was plotted between potentials and deflections. The data obtained is given below:-

P.D. VOLTS	Deflections. INCHES.
.0051	.03
.00985	.042
.01975	.053
.03312	.065
.05161	.08
.06711	.088
.07296	.1
.09427	.112
.11710	.125
.15217	.150
.16180	.159
.2	.17
.24142	.176
.31561	.185
.35012	.189
.37510	.191
.4201	.196
.47005	.20
.50942	.205
.60100	.210
.75021	.22

From an inspection of the calibration curve it is at once evident, that where the capillary is of uniform bore, the deflection is exactly pro-

portional to the potential applied. Where the tube begins to widen, a corresponding increase of P.D., does not produceas great an increment of deflection and the curve then begins to bend. Also, where there is an irregularity in the tube the curve deviates from a straight line. This is clearly shown by the curve.

This curve is only of any value as a means of measuring E.M.F. 's when the meniscus is located at the same point as where the calibration was taken, and when the head of mercury in the electrometer tube is the same, as that used in the calibration. The former can be adjusted by the pressure apparatus, but it is evident that the latter depends upon, whether no change of mercury, etc., has been made or not. Later on in this thesis, several improvements will be suggested whereby the latter condition can also be made constant. However, with the aforementioned details constant, the instrument could be used for measuring very small potentials.

USE AS A ZERO INSTRUMENT OR GALVANOMETER.

This is the field in which the Capillary Electrometer has the greatest application, that of use

as a galvanometer to indicate the absence of a P.D.

It is, of course, evident that the height of mercury column and the position of the meniscus has no bearing on the use of the instrument in this field, as the only necessary action, is the indication of the presence of an E. M. F., no matter how small.

To test its adaptability in this field, the electrometer was connected in parallel, through a switch, with the Leeds and Northrup Galvanometer. Then with the standard cell and battery, the potentiometer was standardized, both the electrometer and galvanometer being used as the zero instruments.

By means of the switch, a balance was first obtained with the Leeds and Northrup Galvanometer. Then the switch was thrown over and the electrometer became the zero instrument.

Although an exact balance was indicated by the galvanometer, read with a lens, a deflection could still be noted of the meniscus of the electrometer, through the telescope. This was repeated several times in order to verify the results.

This is conclusive proof that the Capillary Electrometer, is more sensitive than the Leeds and Northrup Galvanometer, and is, therefore, as far as

sensibility is concerned, adapted to use as a galvanometer.

It should be stated, that the Leeds and Northrup Galvanometer is the most sensitive portable galvanometer in the Laboratories of Armour Institute of Technology.

SENSITIVENESS OF THE ELECTROMETER.

The next experiment conducted, was the determination of the minimum potential to which the meniscus would respond.

If the fingers were placed across the terminals of the short-circuiting key, when the key was open, and if they were rubbed on the terminals, the meniscus would respond. This would at once indicate great sensitiveness.

Again, the terminals of an ordinary magnet-type of a telephone receiver were placed across the terminals of the electrometer. Then loud words were spoken into the receiver. The meniscus moved up and down considerably, showing that it was affected by the potentials which were induced in the receiver by talking into it. This was a very interesting proof of its great sensitiveness, since the E. M. F.'s induced in the receiver are very small.

In order to obtain some definite knowledge of the magnitude of the smallest potentials that the electrometer would respond to, a potential of about .2 volts was started with. Then it was gradually decreased, noting each time any deflection of the meniscus.

With the smallest potential that could be obtained with the resistance boxes, previously mentioned, a value of.000111 volts gave quite a noticeable deflection. This indicates that the electrometer will easily respond to E.M.F.'s smaller than 1/10000 th's of a volt.

If the instrument has dirt in it, and is not in good working order, the small potentials will not be noticeable on the instrument.

RESISTANCE OF THE INSTRUMENT.

The resistance of the Electrometer was measured with a Wheatstone Bridge. Since the resistance is not constant, varying as it does with the position of the meniscus in the capillary, several values were obtained at different parts of the capillary.

The values of the resistance obtained varied from 29700 ohms to 88000 ohms.

It was found, that if a balance was obtained with the Bridge and then the leads to the Electrometer

were reversed, a balance would no longer exist, and upon rebalancing, a very high resistance would be measured; as high as 155000 ohms, in one case.

This seems to show, that there is an E.M.F. of its own generated in the electrometer, which in one case, in the measurment of resistance, was opposed to, and in the other case, aided the E.M.F. of the cell with which the resistance was measured.

ELECTROSTATIC CAPACITY OF THE ELECTROMETER.

The capillary electrometer, by its action, would tend to show that it has electrostatic capacity. When the P.D. is applied, the meniscus moves to a different point of the capillary and stops. The application of the same potential again, without previously short-circuiting, has no effect on the meniscus. Short-circuiting, brings the meniscus back to its original position.

This action is exactly like that of a condenser, only in this case, we have an attendant movement of the mercury column.

If the instrument has electrostatic capacity, the question might arise as to where the dielectric is located. In all probability the dielectric of this

condenser is a film at the surface of contact between the mercury and sulphuric acid.

The electrostatic capacity of the electrometer was then measured by the following method.

A standard condenser of one-half microfarad capacity was charged to a given potential. It was then discharged, by means of a charge and discharge key, through a sensitive Ballistic Galvanometer, whose deflection was read with a telescope and scale. The deflection was noted. Let us call this deflection D1 and the capacity of this condenser C1.

Then the eledtrometer was charged to the same potential, and by means of the same key, discharged through the Ballistic Galvanometer and the deflection was noted. Let us call this deflection D2 and the unknown capacity of the electrometer X.

Now, the deflections of a Ballistic Galvanometer vary with the quantity of electricity discharged through it.

Therefore, in the first place, the quantity Q1=EC1 and gives a deflection D1.
For the second case, the quantity is Q2=EX and gives a deflection D2.
E being the same in both cases, we have that,

$$\frac{Q1}{Q2} = \frac{D1}{D2} = \frac{C1}{X}$$

therefore $X = C1 \frac{D2}{D1}$.

The capacity was measured with three different potentials applied to the condensers.

Since, upon applying these E.M.F.'s to the electrometer, a movement of the meniscus occurs, the capacity measured, is that of the point to which the meniscus moves after the application of the E.M.F.

Therefore, for the smaller potentials, the capacity obtained will be that of the lower or fine bore part of the capillary, while for the larger E.M.F.'s the capacity obtained, will be that of the larger or upper part of the capillary tubes. The averages of several deflections were taken as the correct values.

The following data was obtained.

Capacity of standard condenser C1=1/2 micro-farad.

P.D. Equivalent to.	Deflection for Standard Condenser.	Deflection for Electrometer.
	D1	D2
10000 ohms	39 mm.	219 mm.
7000 ohms.	27.3 mm.	192 mm.
300 ohms.	1.5 mm.	14.8 mm.

This gives by the above formula, capacities of 2.81 m.f., 3.5 M.f., and 4.94 m.f., respectively. The

capacity is larger for the small or lower part of the capillary and smaller for the larger or higher part of the capillary, or in other words, the capacity varies inversely as the diameter of bore for any given electrometer tube.

USE WITH ALTERNATING CURRENTS.

The next experiment was the determination of the action of the electrometer under alternating currents.

The A.C. power was taken from an alternator, which was run at a speed and field current low enough to give about 20 volts terminal E.M.F. By means of two potential transformers of 10 to 1 ratio, this E.M.F. was stepped down 100 to 1 to about .2 volts. This E.M.F., was then applied to the electrometer.

Although the frequency of the current was very small, all that could be seen was a slight chattering of the meniscus up or down, so slight in fact, that it could not at all be measured with the telescope and scale. Although the potential was .2 volts effective value and the maximum would be .283 volts, the deflection as far as could be seen, with the apparatus on hand, was no where near as large as that given by .2

volts direct current. The calibration curve shows a deflection of .181" for .28 volts.

It seems that the inertia of the mercury column is great enough to damp out the oscillations of the P.D., even at low frequencies. At high frequencies, this damping would be greatly magnified.

However, since an oscillograph is seldom used to obtain the actual magnitude of an E.M.F., or current, the fact that the meniscus does not make full deflection is not vital. The important consideration, is the production of an exact reproduction of the wave-shape, irregularities, etc.

Whether or not a wave-shape could be obtained, can only be proved after an oscillograph arrangement would be made. From appearances, at least, under the telescope, it would seem, that wave-shapes could not be obtained, and if they could be obtained, the magnification required, would be so great that the instrument could not be made portable.

From the action of the instrument as we saw it, we believe, that, should an arrangement be constructed whereby the oscillations could be seen, the inertia of a mercury column at high frequencies would damp and smother out any irregularity that may be present

in the wave. This would necessarily make it of no practical value, since, as previously stated, it is desired that an oscillograph should show all the irregularities in the wave-shape, its object being wholly that.

However, should any work along this line be done later on, a few suggestions as to the probable method of arranging this oscillograph might be of value.

A narrow slit could be arranged in front of the capillary tube, just wide enough to permit a beam of light from an electric arc to pass through it without diffraction. Now, the light would be cut off by the mercury in the capillary, but could pass through the sulphuric acid. Then, as the meniscus moved up or down under an alternating current E.M.F., more or less light would be cut off by the meniscus according as it moved up or down. Now, by an arrangement of lenses, the image of the top of the meniscus can be enlarged. All that remains then, is to provide a motion at right angles to that in the capillary tube, which should be in synchronism with the alternating current potential. The combination of these two motions at right angles, will give a wave shape, if thrown on a screen or sensitized plate. One part on one side of the wave shape would, of course, be

light, while that on the other side would be in total darkness.

It seems that many of the ideas and schemes embodied in the General Electric Company Oscillograph could be used in constructing an oscillographic arrangement with the capillary electrometer.

If such an oscillograph could be constructed, and if it would faithfully reproduce pulsating E.M.F.'s, it would be applicable to the study of E.M.F.'s which cannot be studied by the present form of oscillograph.

A very good example of the field in which the capillary electrometer, as an oscillograph, would be applicable, is that of the study of telephone currents. And experiment has been spoken of previously which shows how readily the capillary electrometer will respond to such currents. There is no doubt, that if the capillary electrometer could be made into an oscillograph practically, it would photograph such waves as the present oscillograph would be uninfluenced by.

THE EFFECT OF CONCENTRATION OF ACID.

In order to determine the effect of varying the concentration of acid in the electrometer, various concentrations of same were used. Note was taken of the

deflection of the meniscus with the same potential for different acid strengths. It was found that the strength of acid had no noticable effect on the magnitude of deflection.

SUGGESTED IMPROVEMENTS.

The experimental work having been completed, improvements for the apparatus, suggested by our work with it will be put forth. In the first place, a finer adjustment of the pressure apparatus should be made, so that the pressure can be adjusted to a nicety, and thus control the meniscus similarly. This can be arranged by means of a fine screw adjustment together with a rougher adjustment such as was used in the instrument in this thesis.

In the calibration of this instrument, the fact was spoken of regarding the changing of the head of mercury in the electrometer tube. If a small tube were connected in to the electrometer tube at a point just above the bend in the tube, it could serve as an overflow tube and thus the head of mercury could always be made constant, no matter how many times the mercury be changed. A pinch-cock would of course, be needed at the end of the overflow tube, so as to allow the pressure apparatus to do its work.

For oscillographic work it would be well to weld this overflow tube in as low as possible, thus de-

definition of the medium with its own intrinsic dimensions and structure. It was found that the element of sound had no noticeable effect on the resonance of the theatre.

Conclusions.

The experimental work carried out consisted of determining the site of a theatre, primarily in our own city, it will be put forth. In the first place, a clear delineation of the resonant properties should be made, as well as a precise use be established for a theatre, and then starting the actual analysis. This has to be arranged on basis of a five score alternative location and a minimal acceptable one, and as was used in the instances in this thesis.

In the application of this theatre, the fact that quality of resonance is dependent on the level of reverb in the auditorium alone. It is about time more attention in the distribution time of a sound field above the head of the room, is used. Every as an effective time as this for speech or music could always be made. Conversely, matter that only issues are necessary to consider, a standard would of course, be needed of the and it the condition time, in be to alter the resonance dynamics in the room.

The modification that it could be well, in such this overtime. Time is as fair as possible. This is-

creasing the head of mercury and thereby decreasing the inertia. However, there is a limit to this, as a very small head of mercury would allow the acid to creep up above the mercury.

Another important improvement suggested is that, instead of using long expensive platinum wires, attached to binding posts, which must be cemented on to the glass, short platinum wires should be welded through the glass, at points just above the surface of the mercury. These would then serve as leading in wires and would obviate the necessity of binding posts.

Instead of using a scale or Cathetometer to measure deflections in use as a potential measuring instrument, the capillary tube itself, could be graduated into divisions. Under such circumstances, together with improvements suggested above, there is great possibility for this instrument in the measuring field.

In use as a galvanometer, arrangements should be made whereby the telescope is permanently attached to the electrometer.

Instead of locating the short-circuiting switch on the instrument stand, it would be advisable to locate it off the stand, to prevent jarring the electrometer

when opening or closing the switch.

DISCUSSION AND CONCLUSIONS.

In the first place, the Capillary Electrometer, can be recommended as a galvanometer or zero instrument. It is very sensitive, responding even to the rubbing of fingers across its terminals.

In tests such as those of determining capacities and inductances where galvanometers are required, it is a troublesome matter to obtain balances with an ordinary magnet-type instrument. In such cases the Capillary Electrometer should be invaluable. It is not affected by stray fields nor ordinary mechanical jars, all of which greatly affect the ordinary sensitive galvanometer.

It is a quick-acting instrument, responding instantaneously to potentials.

It is a cheap instrument to construct. From the specifications and drawings herein enclosed, a Capillary Electrometer could easily be constructed for about Seven Dollars. This could materially, be further reduced by introducing short platinum terminals as suggested previously. This would decreasethe cost to about Five Dollars. Compare this with the cost of a Leeds and Northrup Galvanometer with which the Electrometer was compared for sensitiveness,

which is sold comercially for about Twenty five dollars.

However, the Capillary Electrometer could hardly ever be made as portable as the above Galvanometer, for instance. The Galvanometer is fool-proof and will stand more or less hard usage. The Electrometer, however, must be operated in a certain way if results are tobe obtained, and cannot undergo too rough usage.

The Galvanometer is very much more compact, and is easier to handle. It would be very difficult in commercial practice to have the users of a Capillary Electrometer to observe all the precautions herein noted, all of which, are necessary. It is its great difficulty in handling, that, to a large extent, offsets its possibilities. Any instrument in which acid, which is free to fall about, is a part, is a difficult matter to operate commercially.

Nevertheless, in a Laboratory or a testing-room, where the instrument could be permanently fixed, the Electrometer could be made a desirable instrument.

The same difficulties met with in use as a zero instrument, together with some others mentioned, handicap the use of an electrometer, as a potential measuring instrument. However, with the improvements suggested, practicability is approached.

Finally, as to its adaptability for the indicating instrument of an Oscillograph, which was that part of the thesis where great possibilities were expected, this can be said. It is hardly thought that it can be realized. The movement of the meniscus under an alternating current of low frequency was not discernible with the telescope. It would seem, therefore, that the friction in the tube, together with the inertia in the mercury column, would damp out all irregularities of an electrical alternating or pulsating wave, especially of high frequency. However, there is a possibility if arrangements can be made whereby only one cycle of a wave be impressed on the electrometer. If this first cycle could be photographed, perhaps it would show the correct form of wave.

Yet it is impossible to determine what further work and time might develop in the field of the Capillary Electrometer.

Respectfully submitted,

Harry Ostergren
Lambo Kalen.

May 17, 1909.

Finally, as to the susceptibility for the induction instruments or to Qualitatively, which may form part of the thesis where great qualitative work, perhaps, this can be done. In [illegible] that it can be realized. The measurement of the [illegible] under an alternating current of four frequency was all theoretically with the telephone. It would seem, therefore, that the friction in the [illegible], together with the [illegible] material mediums, would seem one all instrumentation of an electrical alternating or pulsating wave, especially of high frequency. However, there is a possibility of arrangements and be made whereby only one cycle of a wave be impressed on the electrometer. If this first cycle could be photographed, perhaps it would show the correct form of wave.

Let it be impossible to determine this further work and time might overlap in the field of the Cognizant Chairmanship.

Respectfully submitted,

May 17, 1929.

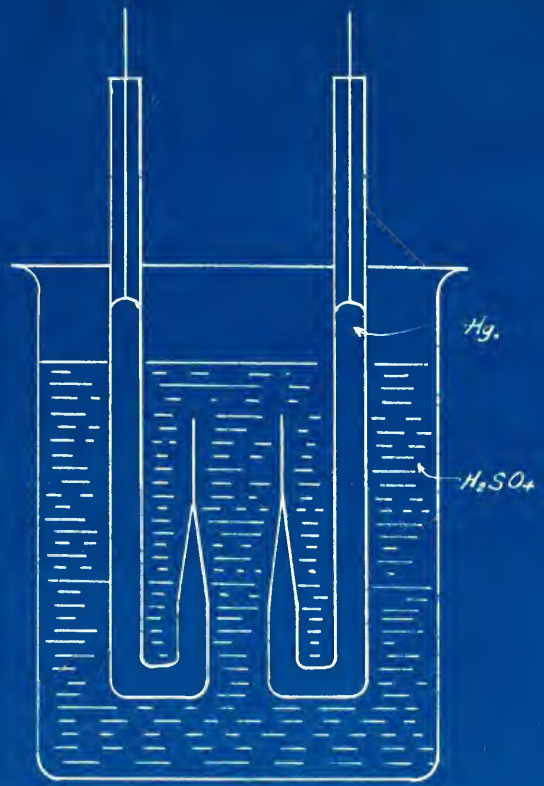

FIG. 1.

H.O
L.K.

48

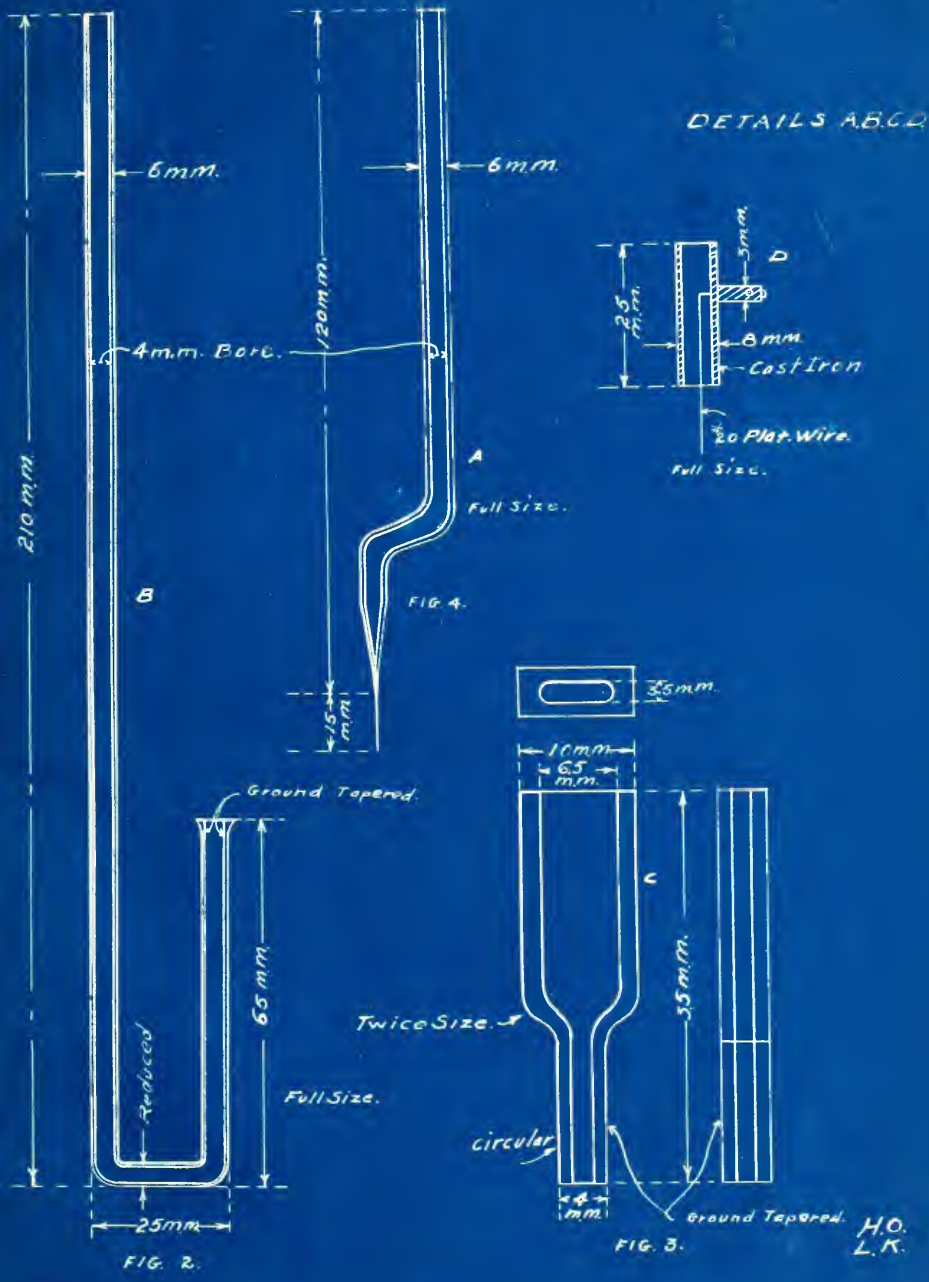
DETAILS A.B.C.D
6mm.
6mm.
120mm.
4m.m. Bore.
210 m.m.
B
A
Full Size.
FIG. 4.
15 m.m.
3mm.
D
25 m.m.
8mm
Cast Iron
20 Plat. Wire.
Full Size.
3.5mm.
10mm
6.5 m.m.
C
35 m.m.
Twice Size.
circular
4 m.m.
Ground Tapered.
FIG. 3.
Ground Tapered.
65 mm
Reduced
Full Size.
25mm
FIG. 2.
H.O.
L.K.

FIG. 5.

ASSEMBLY-FRONT VIEW.

FIG. 4.

ASSEMBLY-FRONT VIEW.

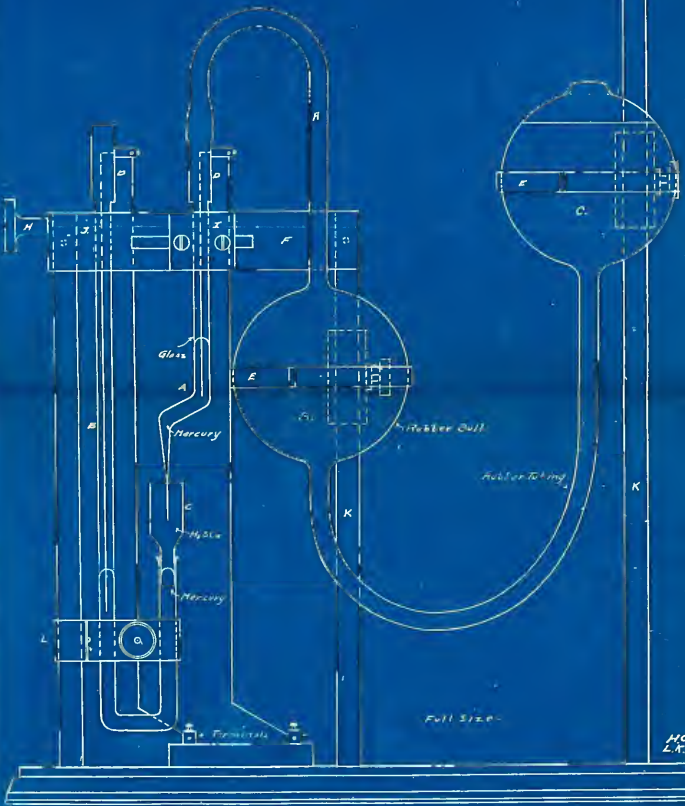

FIG. 6.

FRAME BACK VIEW

FIG. 6.

FRAME BACK VIEW

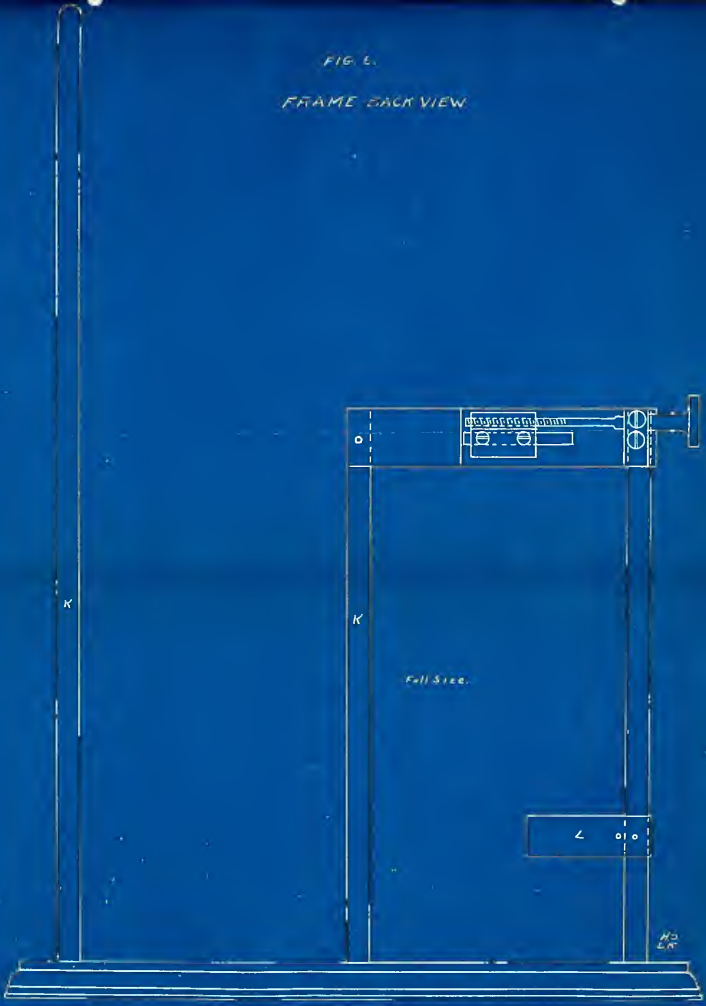

FIG. 7.

DETAILS E,F.

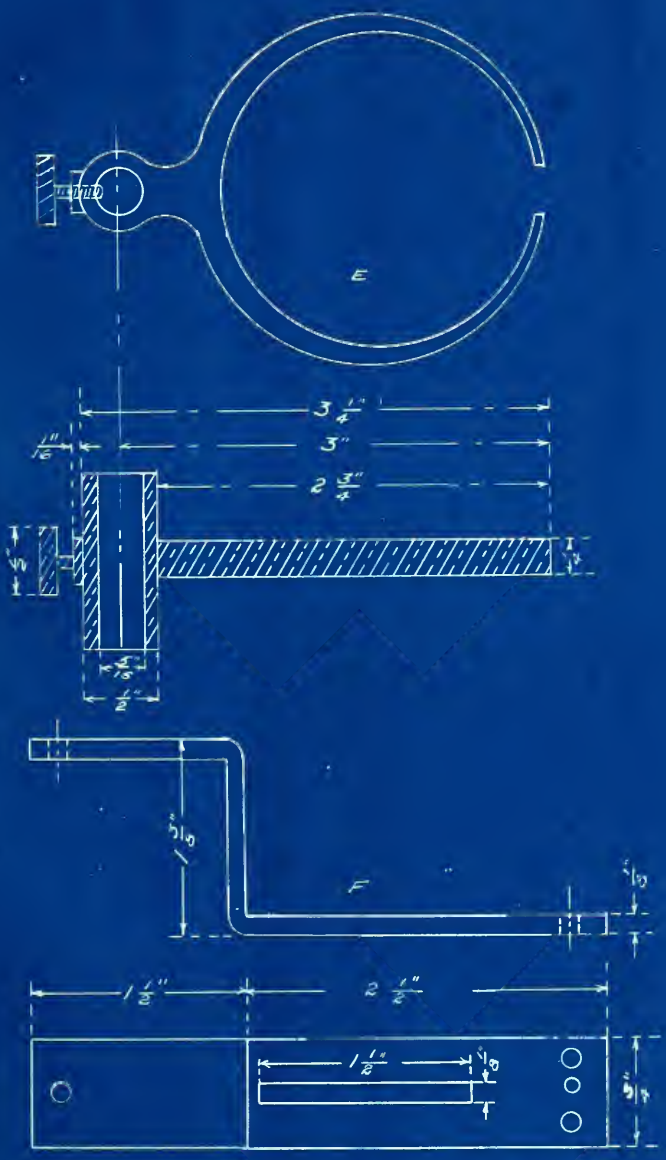

H.O.
L.K.

DETAILS G.H.I.J.

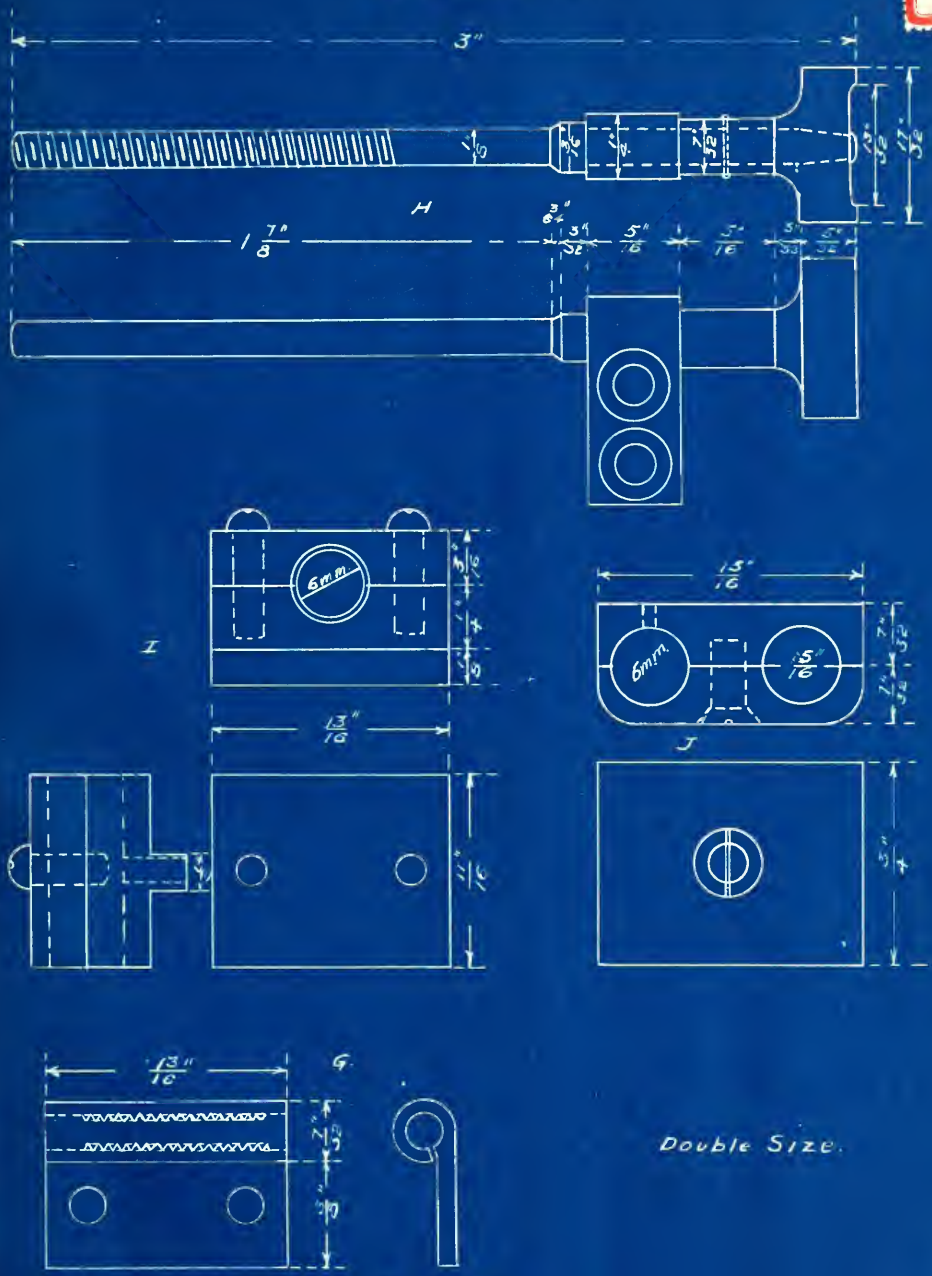

Fig. 8.

H.O.
L.K.

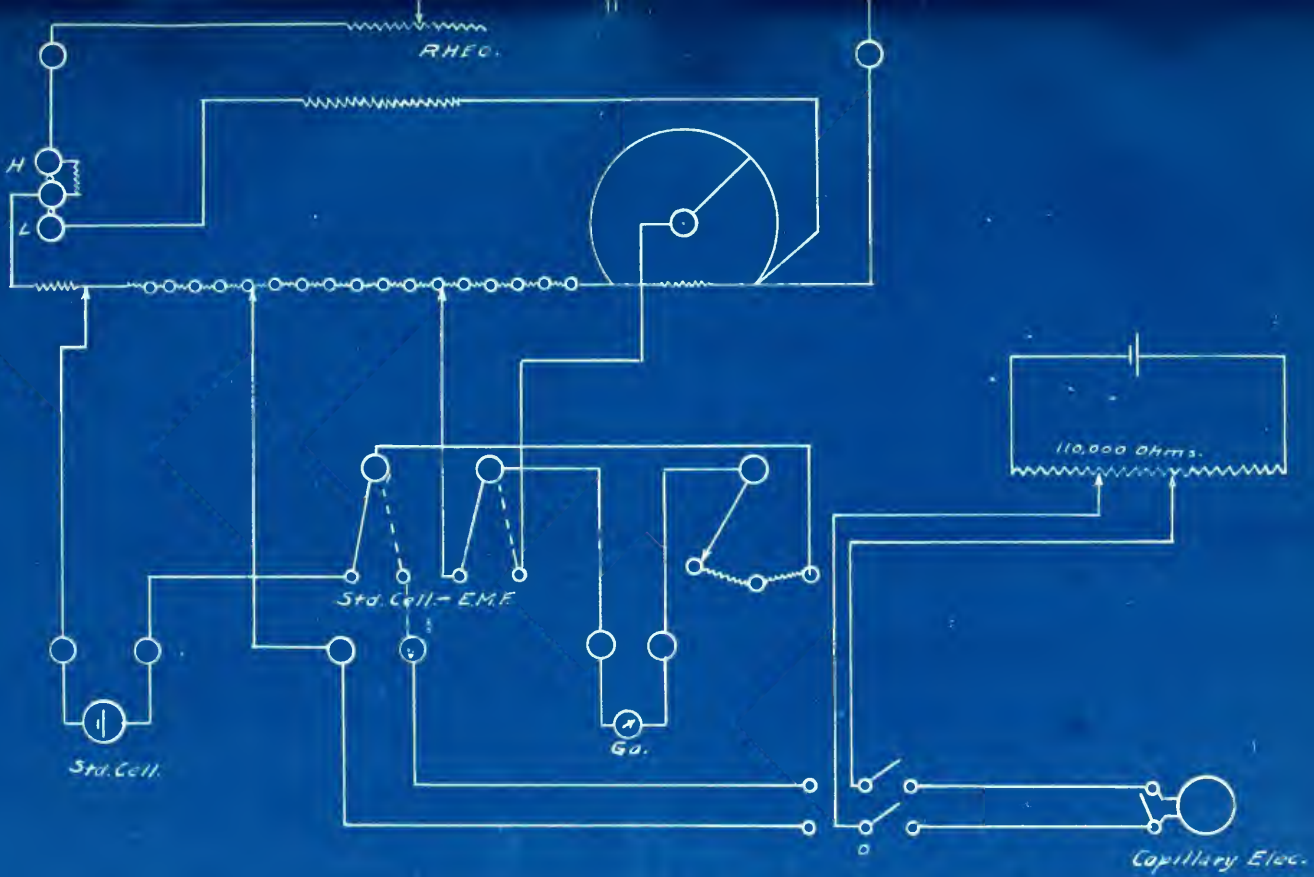

SCHEME FOR CALIBRATION USING
LEEDS + NORTHRUP POTENTIOMETER
Fig. 9.

H.O.
L.K.

54

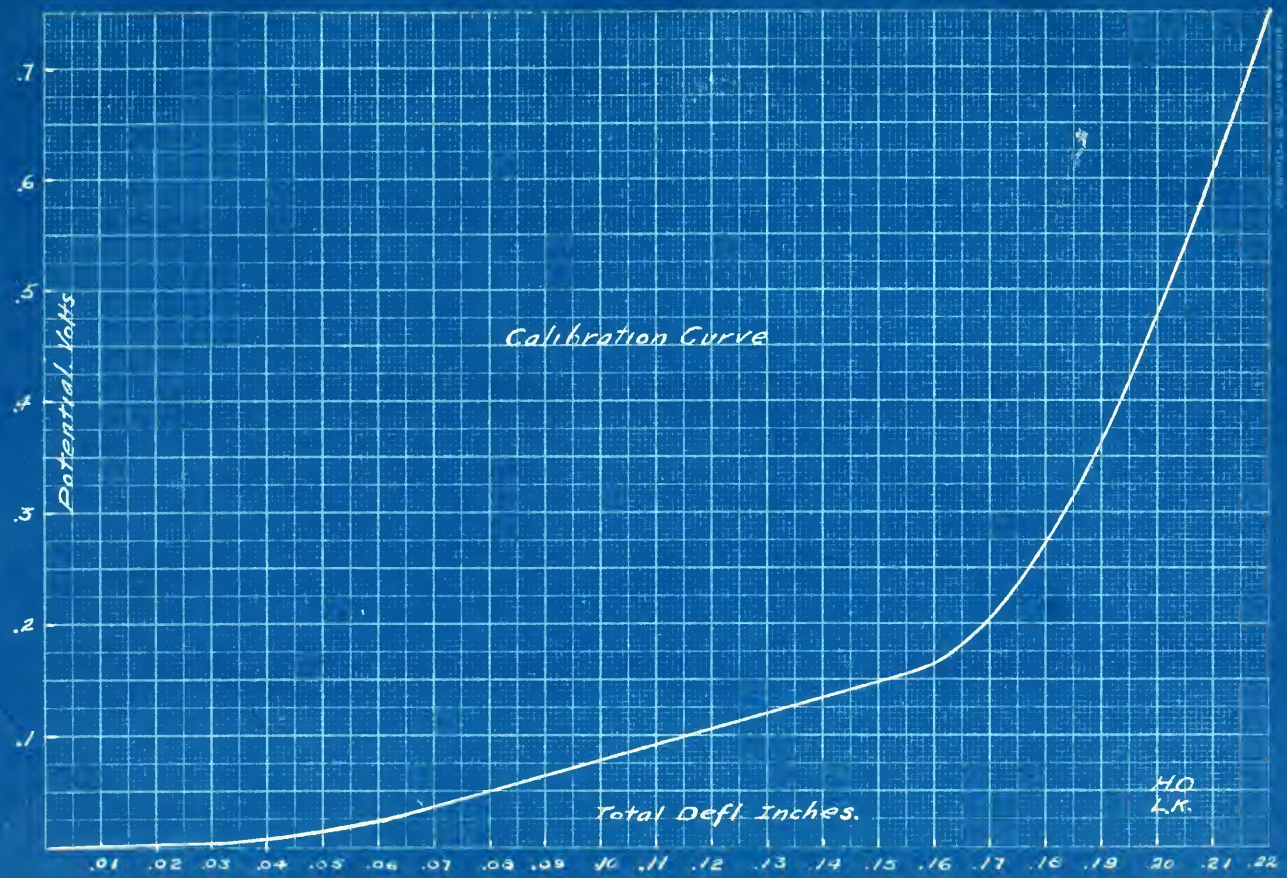
Calibration Curve
Potential Volts
.7
.6
.5
.4
.3
.2
.1
Total Defl. Inches.
.01 .02 .03 .04 .05 .06 .07 .08 .09 .10 .11 .12 .13 .14 .15 .16 .17 .18 .19 .20 .21 .22
HO
L.K.